MB24 / MB24 WR
modular bass loudspeaker

TECHNICAL DATA SHEET

Key Features

- **Low-frequency** reinforcement for Bose® LT arrays and other subwoofer applications that require 40 - 280 Hz bass response
- **Front-loaded tapered transmission** line design provides peak-free extended low-frequency response and reduces port turbulence distortion
- **2 x 12" (305 mm)** high-excursion woofers with 4" (102 mm) voice-coils and 800 W long-term power rating provide high SPL with fast transient response
- **Compact enclosure** optimized for bass-array applications when cardioid or other directional-bass configurations are required for reverberant spaces

Product Overview

The MB24 and MB24 WR low-frequency loudspeakers are designed to provide bass augmentation for Bose LT arrays and other subwoofer applications. The compact 2 x 12" (305 mm) configuration allows minimal-height arrays when used with LT mid/high loudspeakers. Bose Modeler® tools and optional rigging hardware make directional bass arrays easy to design and install using MB24 loudspeakers.

Technical Specifications

System Performance			
Frequency Response (+/-3 dB)[1]	40 Hz - 280 Hz		
Frequency Range (-10 dB)[1]	36 Hz - 290 Hz		
Nominal Dispersion	Omni-directional below 200 Hz		
Sensitivity (SPL / 1 W @ 1 m)[2]	94 dB SPL		
Maximum SPL @ 1 m[3]	123 dB SPL (129 dB SPL peak)		
Crossover Frequency	none (external DSP crossover required)		
Recommended High-Pass Filter	30 Hz (24 dB / octave)		
Loudspeaker EQ	Required		
	Parallel	**Discrete Driver 1**	**Discrete Driver 2**
Long-Term Power Handling[4]	800 W (3200 W peak)	400 W (1600 W peak)	400 W (1600 W peak)
Nominal Impedance	4 Ω	8 Ω	8 Ω
Transducers			
Driver Compliment	LF: Two (2) 12" (305 mm) woofers with 4" (102 mm) voice-coil		

Physical		
	MB24	**MB24 WR**
Enclosure	Baltic birch plywood, 13-ply, 18 mm	Exterior grade Baltic birch plywood, 13-ply, 18 mm
Finish	Polyurethane-based textured paint, black or white	Two part spray polyurethane coating, black
Grille	16-gauge perforated steel grille with powder-coated finish	16-gauge perforated stainless steel grille with powder-coated finish and backed with an open-cell foam
Environmental	Indoor use only	Outdoor per IEC 529 IPX5
Connectors	Two (2) parallel-wired NL4 Neutrik® Speakon® connectors	Two (2) parallel-wired NL4 Neutrik® Speakon® connectors
Suspension / Mounting	Sixteen (16) points SAE 3/8" - 16 threaded inserts (4 each, top, bottom and sides), steel	Sixteen (16) points SAE 3/8" - 16 threaded inserts (4 each, top, bottom and sides), stainless steel
Dimensions	28.1" H x 20.0" W x 25.4" D (713 mm x 508 mm x 646 mm)	28.1" H x 20.0" W x 25.4" D (713 mm x 508 mm x 646 mm)
Net Weight	142 lb (64.4 kg)	142 lb (64.4 kg)
Shipping Weight	165 lb (74.5 kg)	165 lb (74.5 kg)

Product Code		
	MB24	**MB24 WR**
Black	040175	323113-0110
White	040706	N/A

Footnotes:

1. Frequency response and range measured on-axis with recommended active EQ in an anechoic environment.
2. Sensitivity measured in free field (no boundary-loading gain) with recommended active EQ, referenced to 1W/1m.
3. Maximum SPL calculated from sensitivity and power handling specifications, exclusive of power compression.
4. Power handling tested using pink noise filtered to meet IEC 268-5, 6 dB crest factor, 100 hours, with recommended EQ.

Impedance

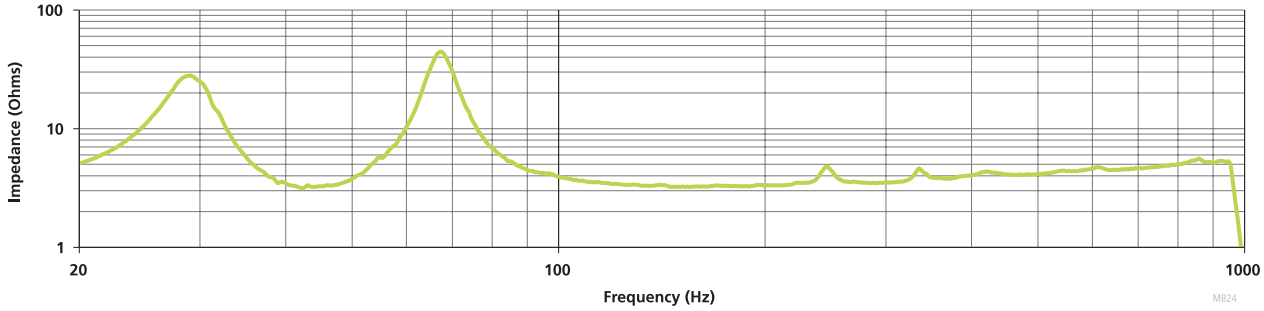

On-Axis Response

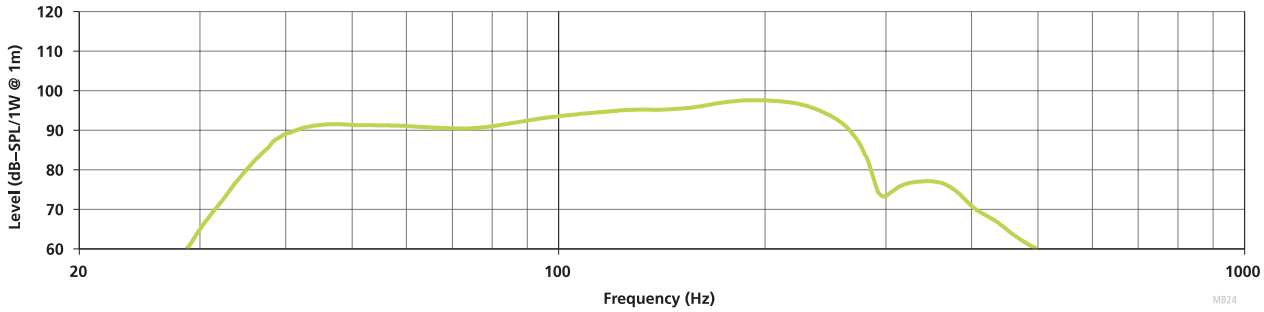

Wiring Diagram

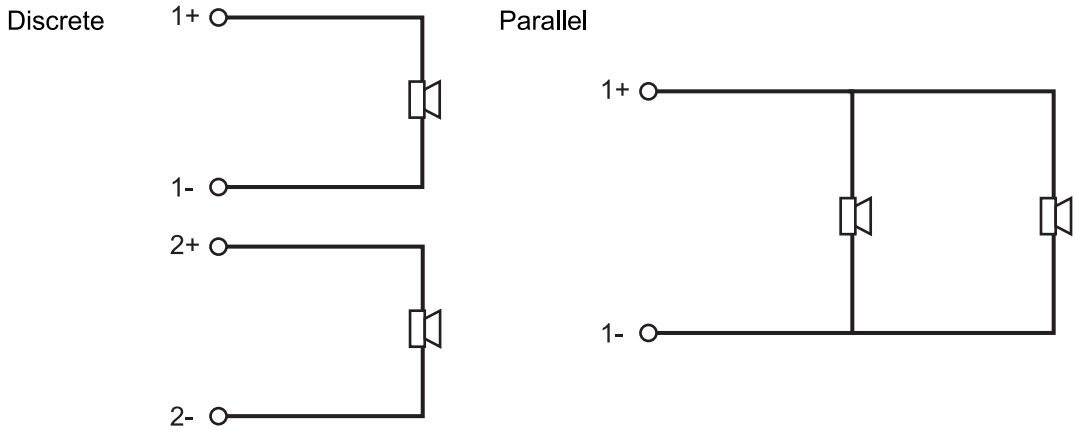

Mechanical Diagrams

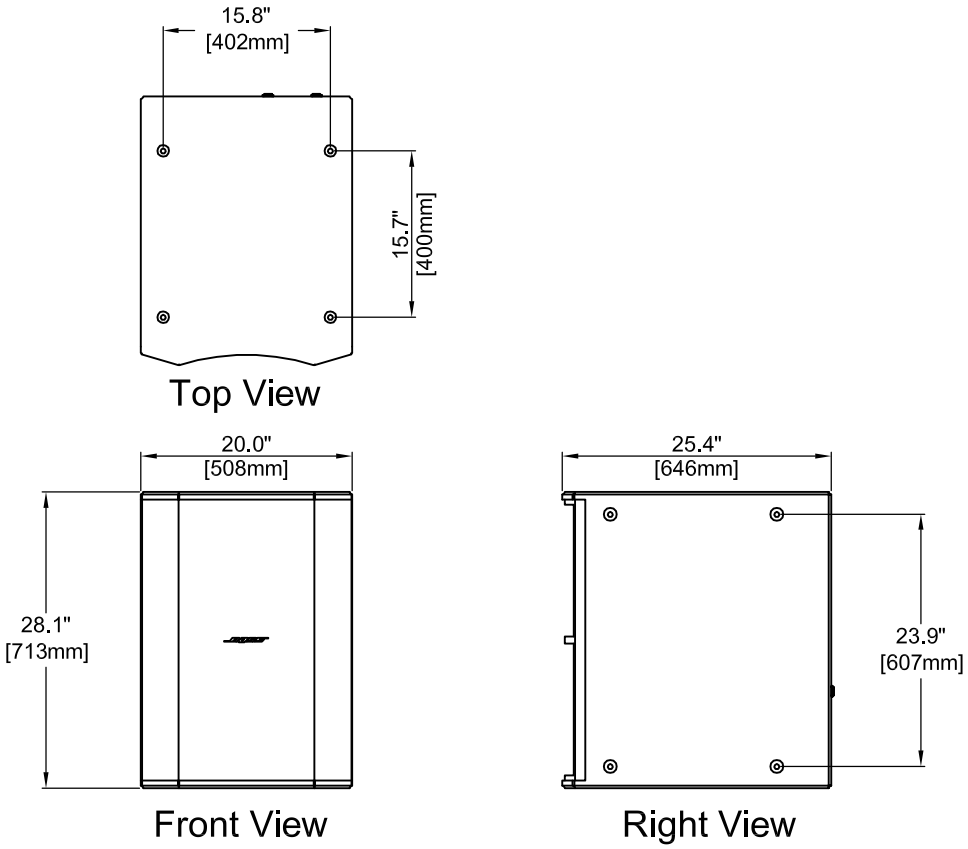

Horizontal Plots

63 Hz Octave Band

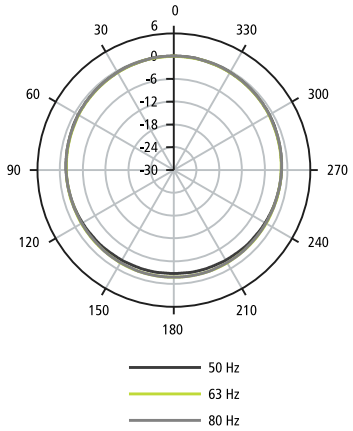

125 Hz Octave Band

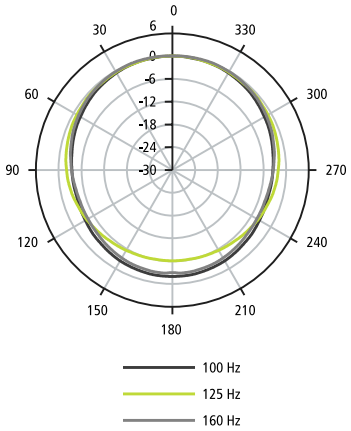

250 Hz Octave Band

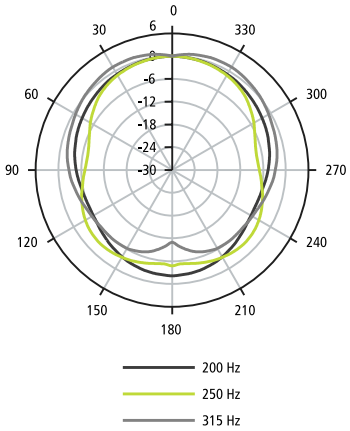

MB24

Vertical Plots

63 Hz Octave Band

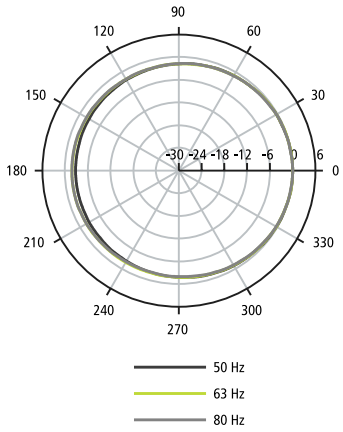

125 Hz Octave Band

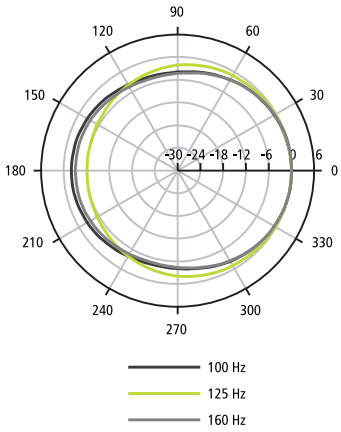

250 Hz Octave Band

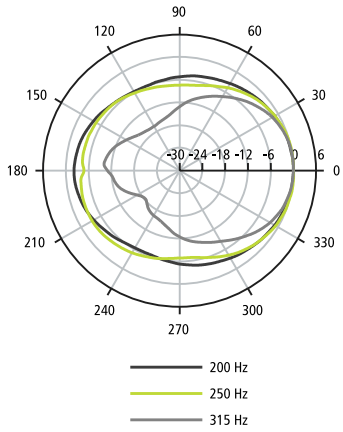

MB24

Architects' and Engineers' Specifications

The low-frequency loudspeaker shall contain two (2) 12" (305 mm) woofers, each with 4" (102 mm) voice coil and high-excursion suspension. The enclosure shall utilize a frontloaded tapered transmission-line design to reduce resonant peaks in frequency response, while reducing port-turbulence distortion.

On-axis system frequency response shall be 40 Hz to 280 Hz (+/- 3 dB) with usable bass response (-10 dB) from 36 Hz to 290 Hz. The system sensitivity shall be 94 dB SPL with 1 watt input and be capable of producing peak output of 129 dB SPL on axis at 1 meter in free-space anechoic environments. For floor-boundary mounted installations, peak output will increase to approximately 135 dB SPL (due to boundary-loading acoustic gain). The loudspeaker shall handle 800 watts of amplifier power (IEC 268-5 pink noise, 6 dB crest factor, for 100 hours).

Nominal input impedance shall be 4 ohms for paralleled connection of the two woofers. Discrete connections to each woofer shall also be provided with nominal impedance of 8 ohms.

MB24 Only:
The enclosure shall be constructed of void-free, Baltic birch plywood with extensive internal bracing. The enclosure exterior shall be treated with a polyurethane-based paint that resists scuffing. The enclosure shall be covered by a 16-gauge perforated steel grille with powder-coated finish. The loudspeaker shall be rated for indoor use only. The enclosure shall have sixteen (16) steel threaded inserts (4 each: top, bottom, sides) that accept standard SAE 3/8"- 16 rigging hardware. Inputs shall be two (2) NL4 Neutrik® Speakon® connectors. Loudspeaker dimensions shall be 28.1" x 20.0" x 25.4" (713 mm x 508 mm x 646 mm). Net weight shall be 142 lb (64.4 kg).

The low-frequency loudspeaker shall be the Bose® MB24 modular bass loudspeaker.

MB24 WR Only:
The enclosure shall be constructed of void-free, exterior-grade Baltic birch plywood with extensive internal bracing. The enclosure interior shall be treated with wood sealer and the exterior finished with a two-part spray polyurethane coating (Chemthane 7030 or equivalent) to resist weather elements and scuffing. The enclosure shall be covered by a 16-gauge perforated stainless steel grille with powder-coated finish and backed with an open-cell foam. The loudspeaker shall survive water incursion consistent with the IEC 529 IPX5 rating. The enclosure shall have sixteen (16) stainless steel threaded inserts (4 each: top, bottom, sides) that accept standard SAE 3/8"-16 rigging hardware. Inputs shall be two (2) NL4 Neutrik® Speakon® connectors. Loudspeaker dimensions shall be 28.1" x 20.0" x 25.4" (713 mm x 508 mm x 646 mm). Net weight shall be 142 lb (64.4 kg).

The low-frequency loudspeaker shall be the Bose® MB24 WR modular bass loudspeaker.

All information subject to change without notice.
® 2012 Bose Corporation
All trademarks are those of their respective owners.